Incubating Heavy Duty Orbital Shakers

Save Incubator Space with Benchtop Incubating and Incubating Refrigerating Shakers

Incubating Heavy Duty Orbital Shakers offer exceptional temperature uniformity and are designed for a variety of shaking and incubating applications.

Unique Features Include:

- The exclusive Opti-Flow Forced Ventilation System utilizes twin induction or a single large fan. Air is deflected around & not directly on samples, creating a circular flow of air ensuring uniformity.
- For repeatable results, the exclusive Accu-Drive shaking system ensures speed accuracy. The Triple Eccentric Drive provides consistent shaking motion throughout the entire speed range.
- The chambers for the ISHD23HDG and ISHD23CDG units are large enough to hold 2 x 6 L Erlenmeyer flasks with optional clamps and platform.

Incubating Heavy Duty Orbital Shakers

Specifications

Model	ISHD16HDG	ISHD23HDG	ISHD23CDG
Motion	Orbital, 0.75 in./19 mm	Orbital, 1 in./25 mm	Orbital, 1 in./25 mm
Speed Range	15 rpm to 500 rpm		
Speed Accuracy	Above 100 rpm +/-1% / Under 100 rpm +/- 1 rpm		
Temperature Range	Ambient +5 °C to 65 °C		15 °C below ambient to 65 °C
Temperature Uniformity	+/- 0.5 °C at 37 °C		
Calibration	Temperature Calibration		
Timer	1 second to 160 hours		
Control	Digital		
Communication	RS-232 Interface		
Max Weight Capacity	35 lb (16 kg)@ 75 rpm, 5 lb (2.3 kg)@ 500 rpm	50 lb (22.7 kg) @ 125 rpm, 10 lb (4.53 kg) @ 500 rpm	
Drive System	Triple Eccentric; Brushless DC motor		
Dimensions (H x L x W)	16 x 25.5 x 14 in. / 40.6 x 64.8 x 35.6 cm	23.5 x 32.1 x 26.6 in. / 59.6 x 81.5 x 67.5 cm	23.5 x 41.1 x 26.6 in. / 59.6 x 104.4 x 67.5 cm
Interior Dimensions (H x L x W)	9.5 x 13.4 x 12 in. / 24.1 x 34 x 30.5 cm	17 x 20.6 x 24.8 in. / 43.2 x 52.3 x 62.9 cm	
Tray Dimensions (L x W)	13 x 11 in. / 33 x 27.9 cm	18 x 18 in. / 45.6 x 45.7 cm	
Net Weight	79.1 lb. / 35.9 kg	224.1 lb. / 101.6 kg	290.4 lb. / 131.7 kg
Power	120 V, 50/60 Hz / 230 V, 50/60 Hz	120 V, 50/60 Hz / 230V, 50/60 Hz	120 V, 50/60 Hz / 230 V, 50/60 Hz
Power Consumption	450 W	800 W	800 W
Working Environment	59 °F – 90 °F, 80% RH*, non-condensing / 15 °C – 32 °C, 80% RH*, non-condensing		

*RH = Relative Humidity

Dimensional Drawings

ISHD16HDG

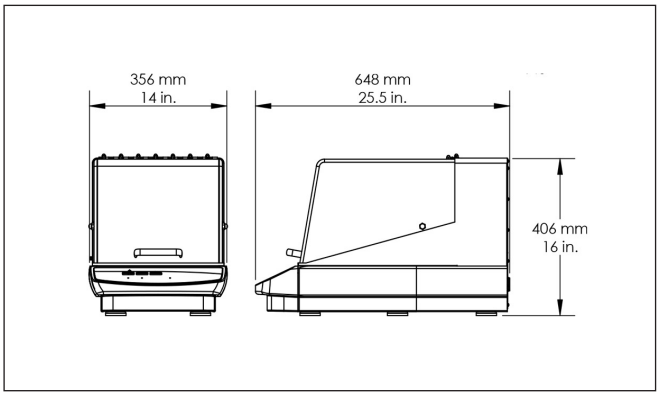

ISHD23HDG

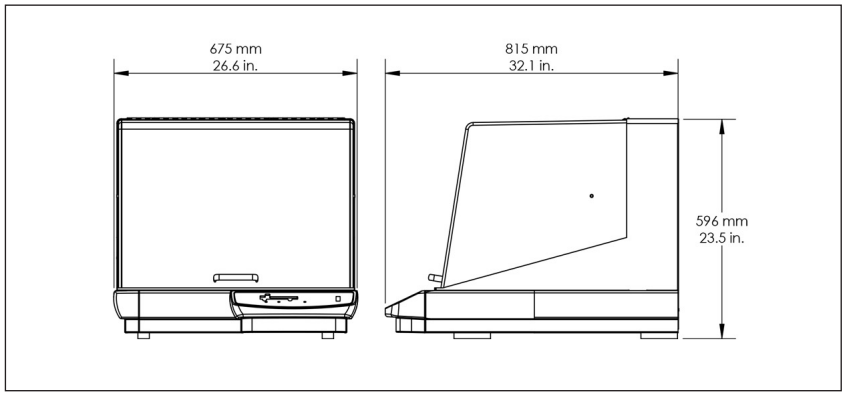

ISHD23CDG

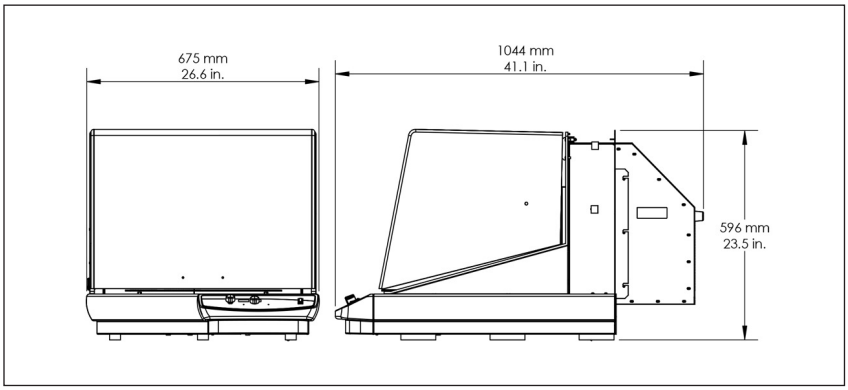

Incubating Heavy Duty Orbital Shakers

Accessories

Description	Part Number	Tube capacity per Rack	ISHD16HDG	ISHD23HDG ISHD23CDG
Universal Platform, 28 x 33 cm, S/S*	30400052	-	1	N/A
Universal Platform, 46 X 46 cm, S/S I-IR*	30400055	-	N/A	1
Rubber Mat, 28 x 33 cm	30400060	-	1	N/A
Flask Clamps, 10 mL	30400084	-	60	113
Flask Clamps, 25 mL	30400085	-	25	64
Flask Clamps, 50 mL	30400086	-	13	32
Flask Clamps, 125 mL	30400087	-	10	20
Flask Clamps, 250 mL	30400088	-	9	20
Flask Clamps, 500 mL	30400089	-	7	13
1 Liter Erlynmeyer Flask Clamp	30400090	-	4	8
2 Liter Erlynmeyer Flask Clamp	30400091	-	N/A	5
2.8 Liter Erlynmeyer Flask Clamp	30400092	-	N/A	2
3 Liter Erlenmeyer Flask Clamp	30400093	-	N/A	2
4 Liter Erlynmeyer Flask Clamp	30400094	-	N/A	4
5 Liter Erlenmeyer Flask Clamp	30400095	-	N/A	4
6 Liter Erlynmeyer Flask Clamp	30400096	-	N/A	2
500 mL Media Bottle Clamp	30400097	-	5	16
1000 mL Media Bottle Clamp	30400098	-	2	10
Flask Clamp Pvc 125 mL	30400099	-	10	20
Flask Clamp Pvc 250 mL	30400100	-	8	18
Flask Clamp Pvc 500 mL	30400101	-	5	12
Flask Clamp Pvc 1000 mL	30400102	-	2	8
Flask Clamp Pvc 2000 mL	30400103	-	N/A	4
Clamp Microplate SS	30400104	-	4	12
Tube Rack 1.5-2mL	30400114	70	2	4
Test Tube Rack 10-13 mm Diameter	30400115	63	2	4
Test Tube Rack 14-16 mm Diameter	30400116	48	2	4
Test Tube Rack 18-20 mm Diameter	30400117	35	2	4
Test Tube Rack 22-25 mm Diameter	30400118	24	2	4
Test Tube Rack For 15 mL Tubes	30400119	35	2	4
Test Tube Rack For 50 mL Tubes	30400120	12	2	4
Test Tube Rack 13 mm Pivoting	30400105	90	1	2
Test Tube Rack 16 mm Pivoting	30400106	60	1	2
Test Tube Rack 20 mm Pivoting	30400107	40	1	2
Test Tube Rack 25 mm Pivoting	30400108	24	1	2
Test Tube Rack 30 mm Pivoting	30400109	21	1	2
Test Tube Rack 10-14 mm Stationary	30400110	48	N/A	3
Test Tube Rack 16-20 mm Stationary	30400111	33	N/A	3
Test Tube Rack 21-25 mm Stationary	30400112	21	N/A	3
Test Tube Rack 50 mL Tubes Stationary	30400113	17	N/A	3

*All units require an accessory platform for mounting flask clamps or test tube racks.

Incubating Heavy Duty Orbital Shakers

Universal Platform, 28 x 33 cm, S/S*
30400052

Universal Platform, 46 X 46 cm, S/S I-IR*
30400055

Other Standard Features & Equipment

Aluminum and Cycoloy construction, temperature calibration feature, overload protection, overshoot protection (temperature), load sensor, PID temperature controller, Triple Eccentric Drive system

Compliance

- Product Safety: CAN/CSA C22.2 No. 61010-1, CAN/CSA C22.2 No. 61010-2-010, CAN/CSA C22.2 No. 61010-2-051, UL 61010-1
- Electromagnetic Compatibility: ICES-003 Class A, FCC Part 15 Class A
- Compliance Marks: TÜV SÜD

*All units require an accessory platform for mounting flask clamps or test tube racks.

80776574_N 20200825 © Copyright OHAUS Corporation

OHAUS CORPORATION
*7 Campus Drive
Suite 310
Parsippany, NJ 07054 USA

Tel: 800.672.7722
973.377.9000
Fax: 973.944.7177

www.ohaus.com

With offices throughout Europe, Asia and Latin America

***ISO 9001:2015**
Registered Quality Management System

OHAUS®