Product Data Sheet
16 Cu. Ft. Standard Solid
Door Pharmacy Refrigerator

PH-ABT-VS-S16S

Product Description

These pharmacy refrigerators are designed for reliable and cost-effective cold storage. This model features ultra-low energy consumption and energy efficient natural refrigerants. Using microprocessor temperature technology, this unit delivers precise temperature monitoring and control. It offers essential security features, including a keyed door lock and temperature alarms, along with remote alarm contacts. Enjoy durable powder-coated steel construction and adjustable inner shelving to optimize your workflow. All features are designed to heighten performance and efficiency in your clinical setting.

Images

Certifications

General Description and Application

Storage capacity (cu. ft)	16 Cu. Ft.
Door	One (1) swing solid door, self-closing, right hinged, not reversible, magnetic door gasket
Shelves	Four (4) adjustable shelves (adjustable in ½" increments)
Mounting and Installation	Swivel casters - locking front casters
Interior lighting	LED interior lights are safety shielded and switch controlled
Airflow Management	Non-applicable
External probe access	3/4" probe access port on rear wall
Insulation	Cabinet is foamed-in-place with EPA compliant high-density urethane foam
Exterior materials	White powder coated steel
Access control	Keyed door lock; compatible with optional digital lock (Pyxis, Omnicell, and AcuDose RX)
General warranty	Two (2) year parts and labor warranty
Compressor warranty	Five (5) year compressor warranty
Product Weight (lbs)	237
Shipping Weight (lbs)	277
Rated Amperage	2 Amps
Power Plug/Power Cord	NEMA 5-15 plug, vaccine storage power cord warning label
Facility Electrical Requirement	110 - 120V AC, 15A breaker, NEMA 5-15 receptacle
Agency Listing and Certification	ETL, C-ETL listed

Performance

Maximum temperature variation (Cabinet air)	+/- 2.5° C
Stability (Simulator ballast)	+/- 0.5° C
Adjustable Temperature Range	36°F to 46°F (2°C to 8°C), Calibrated using a NIST traceable device, certificate included
Stability (Simulator bag)	Non-applicable
Energy Consumption (KWh/day)	<0.9 KWh/day
Average Heat Rejection (BTU/hr)	<250 BTU/h
Noise Pressure Level (dBA)	40 dBA or less installed
Pull down time to nominal operating temp	< 30 min (empty)
Performance Note	Max temperature variation based on an empty chamber at steady state using 15 bare (unweighted) thermocouple probes. Product loading, door openings, and ambient conditions will affect performance. Stability of simulator ballast based on bottle probe provided with the unit located center of empty chamber at steady state, no door openings

Refrigeration System	
Compressor	Hermetic
Refrigerant	EPA SNAP compliant R600a Isobutane (Hydrocarbon natural refrigerant)
Condenser	Tube and grid, high efficiency fan forced air
Evaporator	Fin and tube, high efficiency fan forced air
Defrost	Cycle Defrost

Controller, Configuration, Alarms and Monitoring	
Controller technology	Microprocessor temperature controller, C°/F° switchable, resolution is 0.1° C/0.2° F
Battery Backup	Non-applicable
Display technology	Digital temperature display
Display probe	Product simulator bottle with glass bead media
Digital Communication	Non-applicable
Included accessories	Pharmacy refrigerator/freezer toolkit
External alarm connection	Remote alarm contacts
Alarms	Audible and visual high/low temperature alarms, remote alarm contacts
Display Probe	Product simulator bottle with glass bead media
Disclaimers	Refrigerator requires a minimum 2” of clearance around back and sides of the unit for proper ventilation (more if next to heat rejecting equipment) - improper installation will void the warranty and will lead to temperature maintenance issues, overheating and possible failure

Dimensions

	Width (in.)	Depth (in.)	Height (in.)	Door Swing (in.)	Total open Depth (in.)
Exterior	25"	28.875"	79''	21.5''	50.375''
Interior	20.375''	20.375''	48.75''		

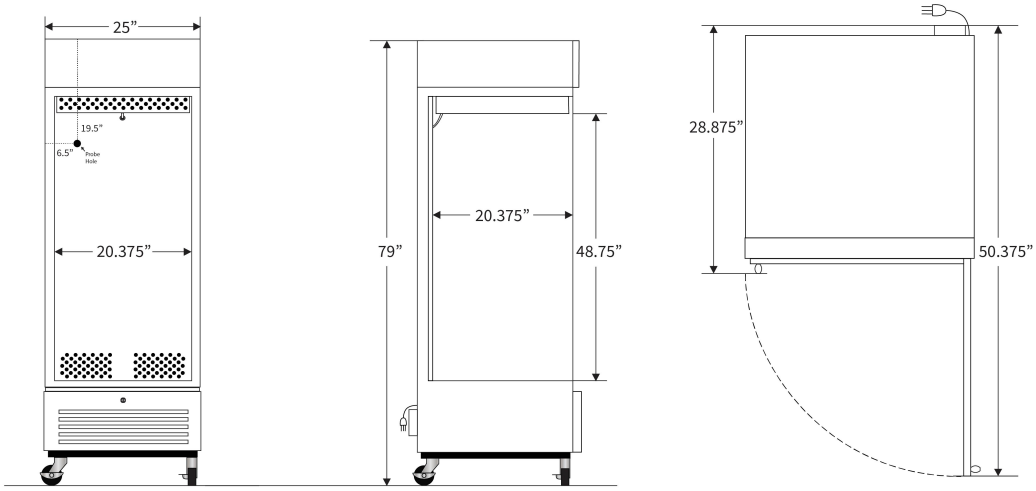

Contact

Customer Service	800-648-4041 Option 3	customerservice@horizonscientific.com
Technical Service	800-648-4041 Option 5, Parts Option 4	technicalservice@horizonscientific.com

Rev_11212025