PH-ABT-VS-S36S

Product Description

These pharmacy refrigerators are designed for reliable and cost-effective cold storage. This model features low energy consumption and energy efficient natural refrigerants. Using microprocessor temperature technology, this unit delivers precise temperature monitoring and control. It offers essential security features, including keyed door locks and temperature alarms, along with remote alarm contacts. Enjoy durable powder-coated steel construction, and adjustable inner shelving to optimize your workflow. All features are designed to heighten performance and efficiency in your clinical setting.

Images

Certifications

General Description and Application	
Storage capacity (Cu. Ft.)	36 Cu. Ft.
Door	Two (2) swing solid doors, self-closing, one right hinged, one left hinged, magnetic door gasket
Shelves	Eight (8) adjustable shelves (adjustable in 1/2" increments)
Mounting and installation	Swivel casters - locking front casters
Interior lighting	LED interior lights are safety shielded and switch controlled
Airflow management	Non-applicable
External probe access	3/4" probe access port on rear wall
Insulation	Cabinet is foamed-in-place with EPA compliant high-density urethane foam
Exterior materials	White powder coated steel
Access control	Keyed door lock
General warranty	Two (2) year parts and labor warranty
Compressor warranty	Five (5) year compressor warranty
Product weight (lbs)	345
Shipping weight (lbs)	395
Rated amperage	3 Amps
Power plug/power cord	NEMA 5-15P plug
Facility electrical requirement	NEMA 5-15P plug, vaccine storage power cord warning label
Agency listing and certification	ETL, C-ETL listed: certified to UL471 standard.

Performance	
Maximum temperature variation (cabinet air)	+/- 2.5° C
Stability (simulator ballast)	+/- 0.5° C
Adjustable temperature range	36° F to 46° F (2° C to 8° C), Calibrated using a NIST traceable device, certificate included
Energy consumption (KWh/day)	<2.2 KWh/day
Average heat rejection (BTU/hr)	<570 BTU/h
Noise pressure level (dBA)	40 dBA or less installed
Pull down time to nominal operating temp	< 40 min (empty)
Performance note	Max temperature variation based on an empty chamber at steady state using 15 bare (unweighted) thermocouple probes. Product loading, door openings, and ambient conditions will affect performance. Stability of simulator ballast based on bottle probe provided with the unit located center of empty chamber at steady state, no door openings

Refrigeration System	
Compressor	Hermetic
Refrigerant	EPA SNAP compliant R600a Isobutane (Hydrocarbon natural refrigerant)
Condenser	Tube and grid, high efficiency fan forced air
Evaporator	Fin and tube, high efficiency fan forced air
Defrost	Cycle Defrost

Controller, Configuration, Alarms and Monitoring	
Controller technology	Microprocessor temperature controller
Battery backup	Non-applicable
Display technology	Non-applicable
Digital communication	Non-applicable
External alarm connection	Remote alarm contacts
5ìãLJfłè p№2ôŜ	t№2ŘdzÔú ãìYdzfłú2№ ô2úúfŜ ǿłúK Ǝfłãã ôŜłŘ YŜŘłł
Alarms	Audible and visual high/low temperature alarms, remote alarm contacts, sensor error alarm
Included accessories	Pharmacy refrigerator/freezer toolkit
Disclaimers	Refrigerator requires a minimum 2” of clearance around back and sides of the unit for proper ventilation (more if next to heat rejecting equipment) - improper installation will void the warranty and will lead to temperature maintenance issues, overheating and possible failure

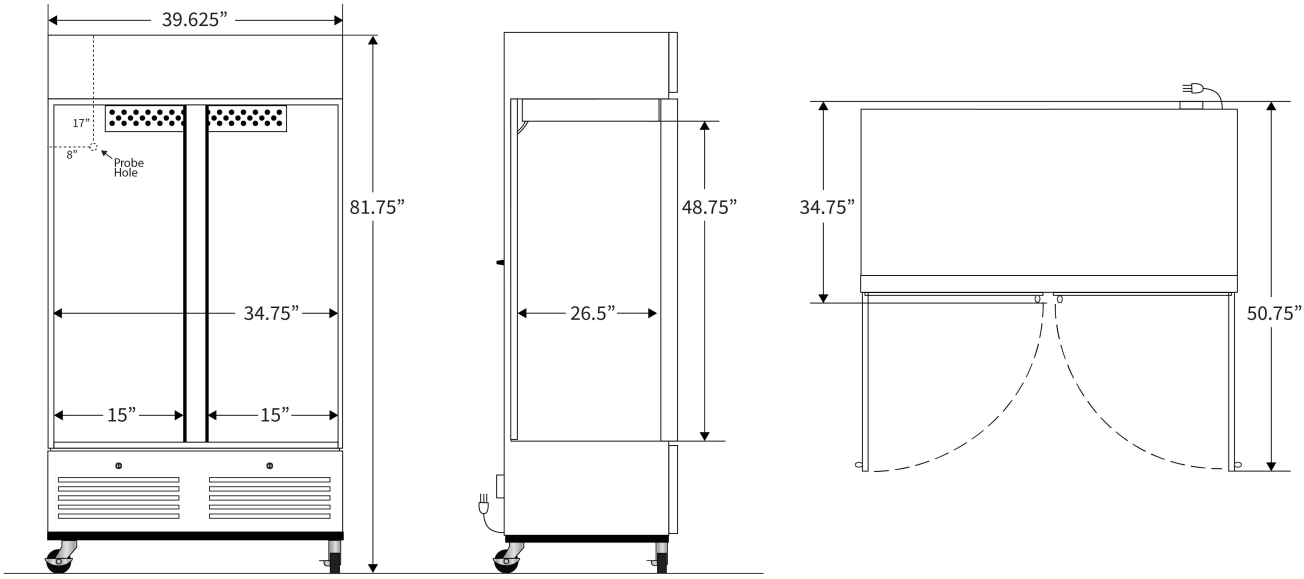

Contact		
Customer Service	800-648-4041 Option 3	customerservice@horizonscientific.com
Technical Service	800-648-4041 Option 5, Parts Option 4	technicalservice@horizonscientific.com

Rev_05.29.26