**Product Data Sheet**
49 Cu. Ft. Standard Glass
Door Laboratory Refrigerator

# ABT-VS-LS-49

## Product Description

These laboratory refrigerators are designed for reliable and cost-effective cold storage. This model features ultra-low energy consumption and energy efficient natural refrigerants. Using microprocessor temperature technology, this unit delivers precise temperature monitoring and control. It offers essential security features, including a keyed door lock and temperature alarms, along with remote alarm contacts. Enjoy durable powder-coated steel construction, glass door transparency, and adjustable inner shelving to optimize your workflow. All features are designed to heighten performance and efficiency in your lab.

## Images

## Certifications

## General Description and Application

| | |
|---|---|
| Storage capacity (cu. ft) | 49 Cu. Ft. |
| Door | Two (2) swing glass doors, self-closing, magnetic door gasket |
| Shelves | Eight (8) adjustable shelves (adjustable in ½" increments) |
| Mounting and Installation | Swivel casters - locking front casters |
| Interior lighting | LED interior lights are safety shielded and switch controlled |
| Airflow Management | Non-applicable |
| External probe access | 3/4" probe access port on rear wall |
| Insulation | Cabinet is foamed-in-place with EPA compliant high-density urethane foam |
| Exterior materials | White powder coated steel |
| Access control | Keyed door lock |
| General warranty | Two (2) year parts and labor warranty |
| Compressor warranty | Five (5) year compressor warranty |
| Product Weight (lbs) | 448 |
| Shipping Weight (lbs) | 540 |
| Rated Amperage | 3 Amps |
| Power Plug/Power Cord | NEMA 5-15 plug |
| Facility Electrical Requirement | 110 - 120V AC, 15A breaker, NEMA 5-15 receptacle |
| Agency Listing and Certification | ETL, C-ETL listed, Energy Star Certified |

## Performance

| | |
|---|---|
| Maximum temperature variation (Cabinet air) | +/- 2.5° C |
| Stability (Simulator ballast) | +/- 0.5° C |
| Adjustable Temperature Range | 2° C to 15° C |
| Stability (Simulator bag) | Non-applicable |
| Energy Consumption (KWh/day) | <2.2 KWh/day *meets ENERGY STAR® v2.0 for Laboratory Refrigerators |
| Average Heat Rejection (BTU/hr) | <570 BTU/h |
| Noise Pressure Level (dBA) | 40 dBA or less installed |
| Pull down time to nominal operating temp | < 40 min (empty) |
| Performance Note | Max temperature variation based on an empty chamber at steady state using 15 bare (unweighted) thermocouple probes. Product loading, door openings, and ambient conditions will affect performance. Stability of simulator ballast based on bottle probe provided with the unit located center of empty chamber at steady state, no door openings |

| Refrigeration System | |
|---|---|
| Compressor | Hermetic |
| Refrigerant | EPA SNAP compliant R600a Isobutane (Hydrocarbon natural refrigerant) |
| Condenser | Tube and grid, high efficiency fan forced air |
| Evaporator | Fin and tube, high efficiency fan forced air |
| Defrost | Cycle Defrost |

| Controller, Configuration, Alarms and Monitoring | |
|---|---|
| Controller technology | Microprocessor temperature controller, C°/F° switchable, resolution is 0.1° C/0.2° F |
| Battery Backup | Non-applicable |
| Display technology | Digital temperature display |
| Display probe | Product simulator bottle with glass bead media |
| Digital Communication | Non-applicable |
| Data Transfer | Non-applicable |
| External alarm connection | Remote alarm contacts |
| Alarms | Audible and visual high/low temperature alarms, remote alarm contacts |
| Display Probe | Product simulator bottle with glass bead media |
| Disclaimers | Refrigerator requires a minimum 2” of clearance around back and sides of the unit for proper ventilation (more if next to heat rejecting equipment) - improper installation will void the warranty and will lead to temperature maintenance issues, overheating and possible failure |

**Dimensions**

| | Width (in.) | Depth (in.) | Height (in.) | Door Swing (in.) | Total open Depth (in.) |
|---|---|---|---|---|---|
| Exterior | 54" | 34.75" | 81.75" | 23.75" | 58.125" |
| Interior | 49.25" | 27.5" | 48.75" | | |

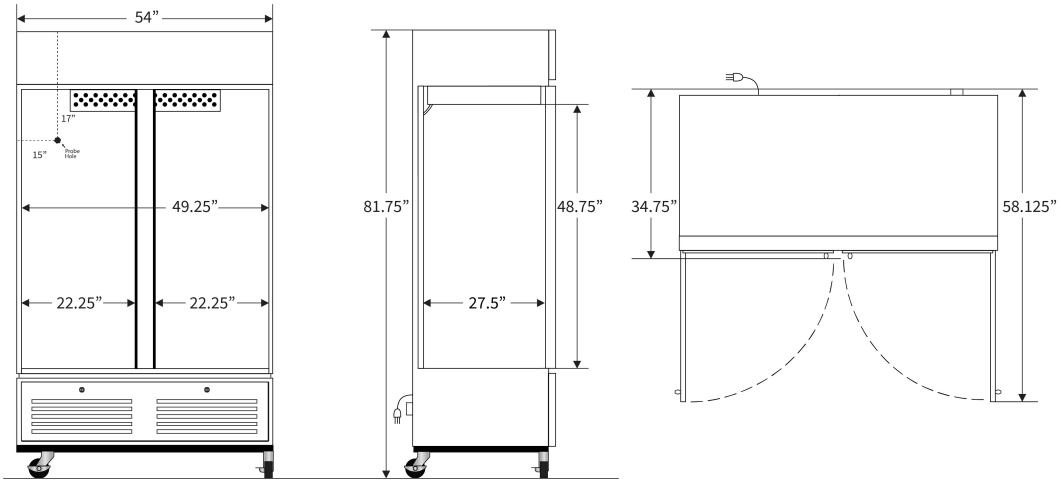


| Contact | | |
|---|---|---|
| Customer Service | 800-648-4041 Option 3 | customerservice@horizonscientific.com |
| Technical Service | 800-648-4041 Option 5, Parts Option 4 | technicalservice@horizonscientific.com |

*Rev_11212025*